PRODUCED BY AN AUTODESK EDUCATIONAL PRODUCT

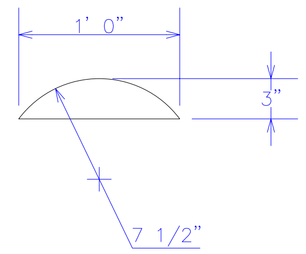

A - A' SECTION

SCALE: 3" = 1'0"
CREATE PROFILE ON ALL PLANKING

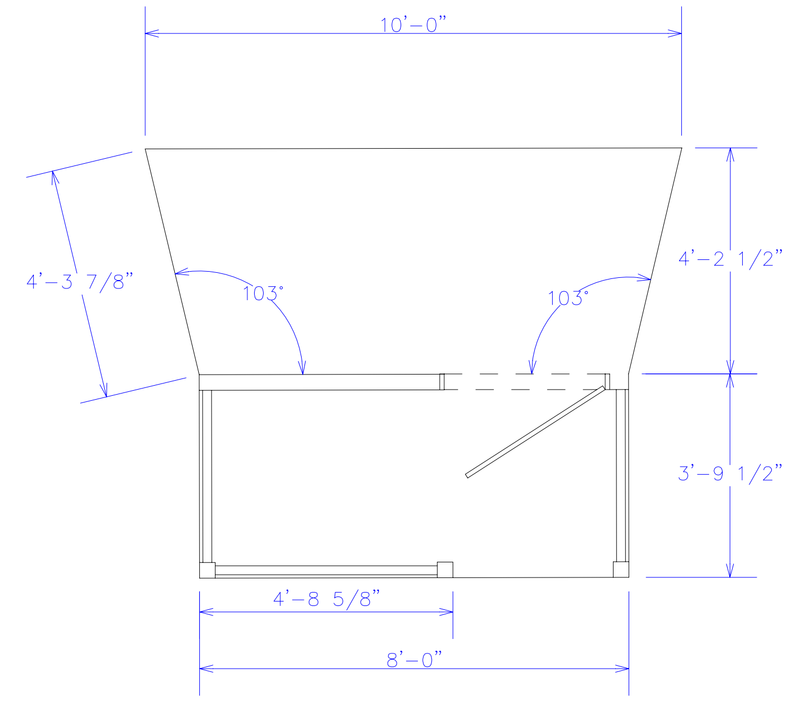

TOP VIEW

TEVYE'S HOUSE

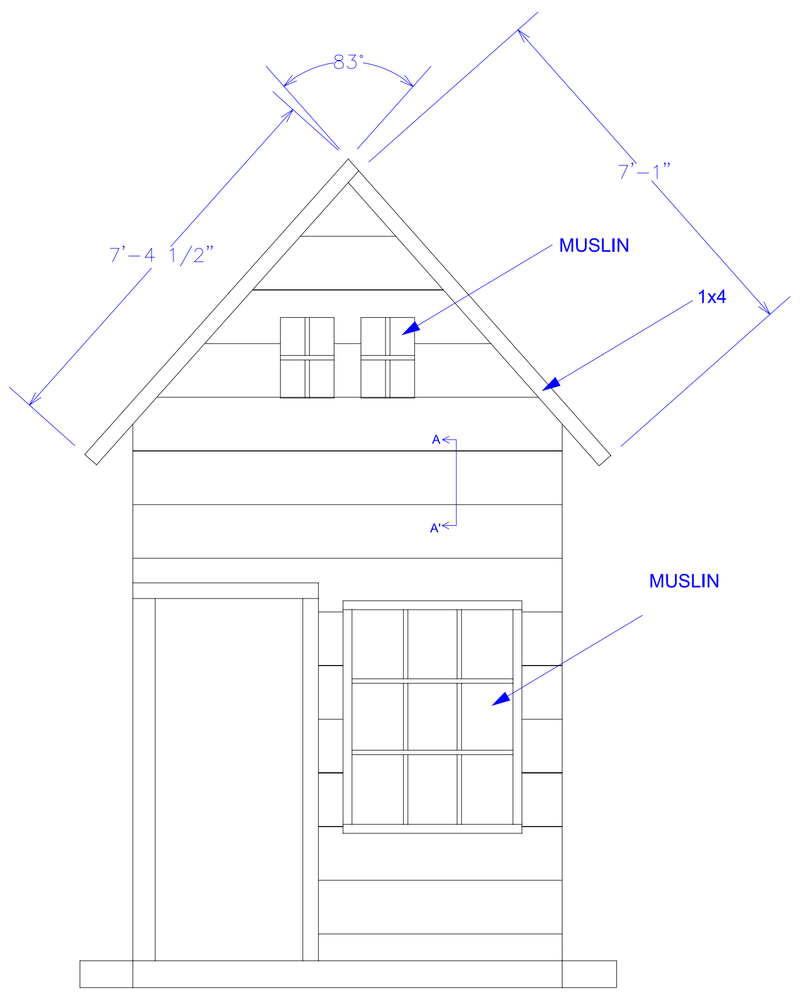

FRONT ELEVATION - INTERIOR

TEVYE'S HOUSE

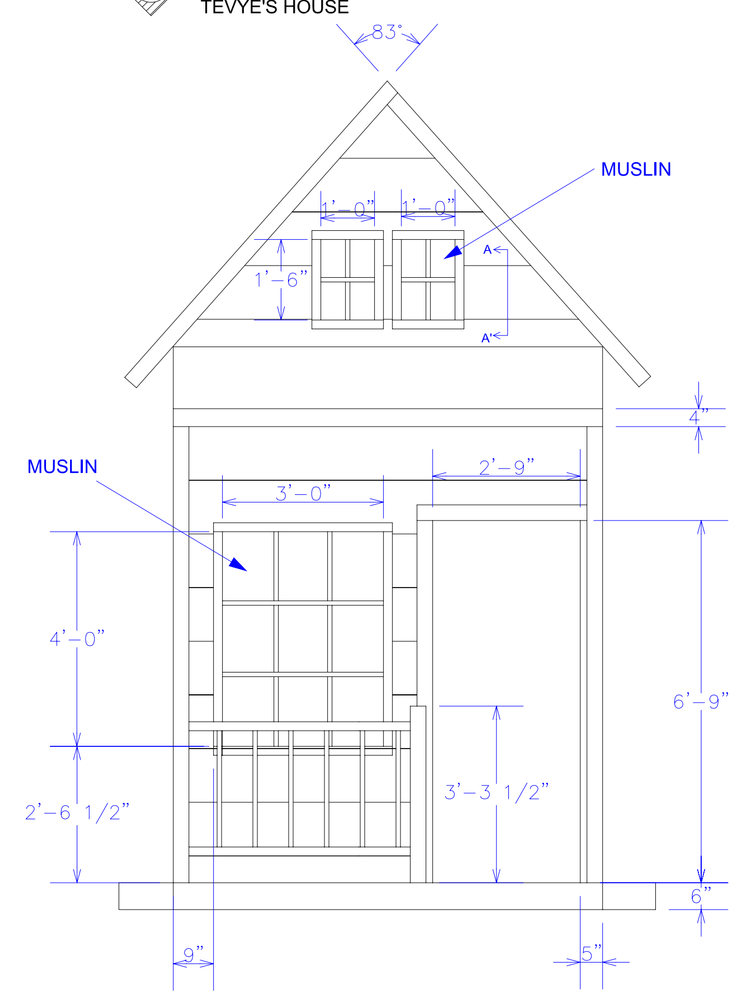

FRONT ELEVATION - EXTERIOR

TEVYE'S HOUSE

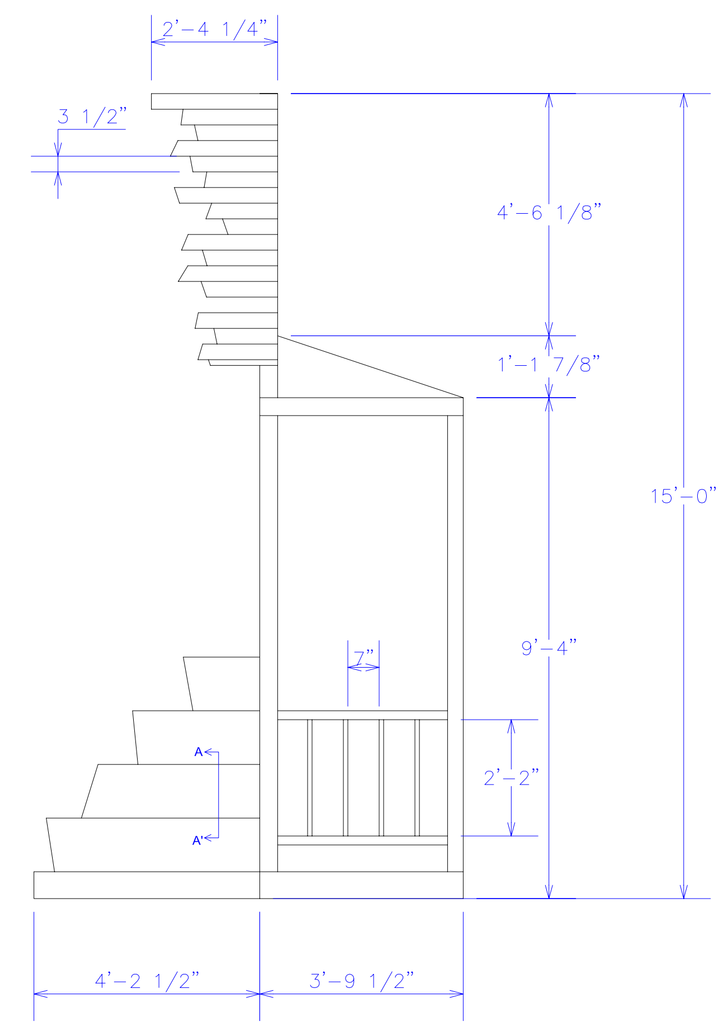

SIDE ELEVATION

TEVYE'S HOUSE

NOTES

TEVYE'S HOUSE

* HOUSE NEEDS SMART CASTERS
* HOUSE NEEDS TO BE ABLE TO BE LOCKED DOWN
* DOOR NEEDS TO FUNCTION
* WINDOW TRIM: 1X2"
* MULLINS: 1' WIDE

UNIVERSITY OF FLORIDA	
FIDDLER ON THE ROOF	
TEVYE'S HOME	Dwg NO. 16
Director:	
Scenic Designer: M.L. Aschenbach	
Tech Director:	Of: 18
Drafted by: M.L. Aschenbach	DWG. Date 9/30/06
Approved Date	Scale 1/2" = 1'

PRODUCED BY AN AUTODESK EDUCATIONAL PRODUCT
PRODUCED BY AN AUTODESK EDUCATIONAL PRODUCT
PRODUCED BY AN AUTODESK EDUCATIONAL PRODUCT